(SCREWS ARE SUPPLIED IN THE HARDWARE KIT TO MOUNT THE READER HEAD. THE METRIC SCREWS FOR THE X-AXIS ARE NOT NECESSARY.)

SPACING

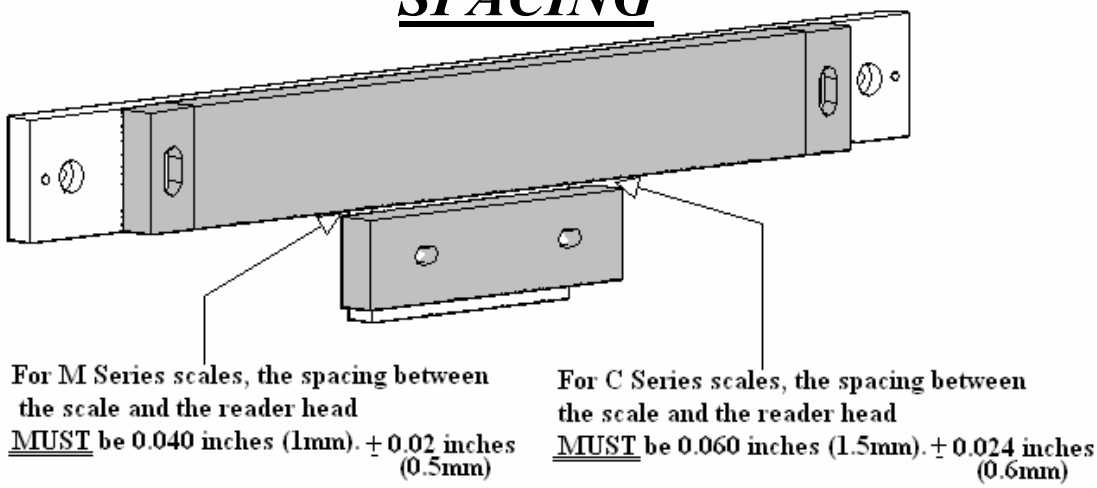

ALIGN THE SIDES OF THE SCALE by indicating the ends and the center.

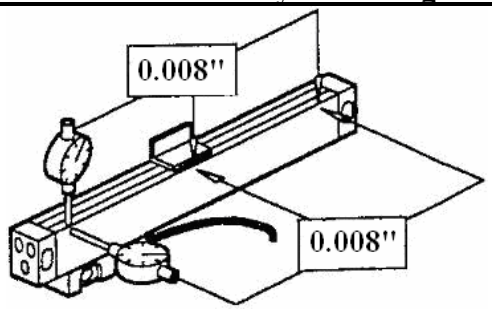

The following instructions are to be used with the instructions supplied with the scales.

1. Determine the best location for mounting the scale and the reader head on the back of the machine bed. Check to make sure the machine still has full travel without over traveling the scale.
2. Mount the Z scale to the back of the machine bed by tapping two holes for ¼-20 SHCS. Adjust the scale parallel and square to the carriage travel per scale manual specifications for the scale alignment.

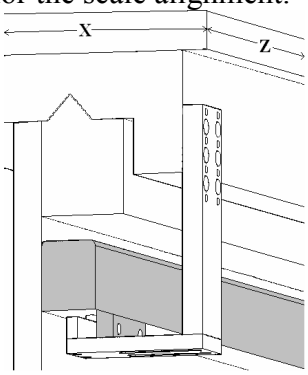

3. The reader head mounts using a 3-piece bracket assembly .Vertical bracket and horizontal bracket may be shortened simply by sawing to desired length. Reader head bracket may be off set right or left. Make any modifications needed to the bracket assembly and then install the assembly by using the scale manual specifications for the reader head alignment.

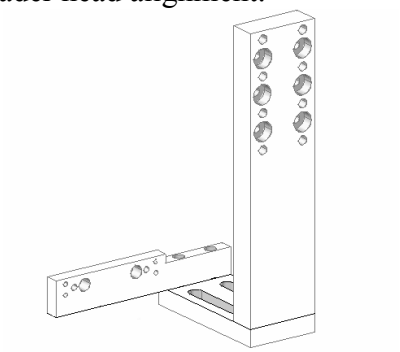

4. Always carefully check for scale over travel.

5. It is recommended that if your scale is over 32" long that you should use the center support. It slides into the dovetail on the top of the scale and is mounted with one M4 x 35mm SHCS or 8-32 x 1.25 SHCS equivalent and a spherical washer. Center support must be straight and parallel to the scale using the two M6 x 20mm SS. Secure the center support to the scale with two M4 x 12mm SHCS.

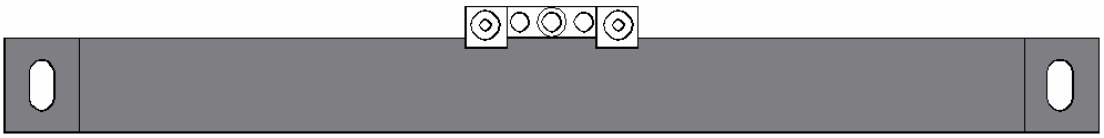

6. Tie up cables properly so they won't be caught by the machine travel.

7. Determine the best location fore the cross slide scale and the reader head. This is usually best on the tailstock of the cross slide.

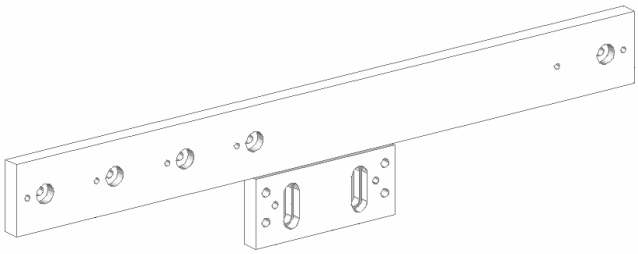

8. Modify the backer bar and scale cover to fit the cross slide scale by sawing between the proper set of holes.

9. Mount the backer bar to the cross slide, and then install the scale parallel and square to the cross slide travel, per the scale manual specifications for the reader head alignment.

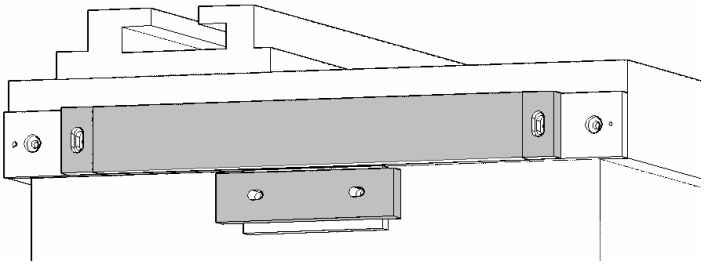

10. Mount the reader head bracket to the carriage and set by shimming or by set screws. Adjust using the scale manual specifications for the reader head alignment.

11. Always carefully check for scale over travel.

12. Mount scale cover using 10-32 BHCS.

13. Tie up cables properly so they won't be caught by the machine travel.

Z-Axis Hardware

Code #	Quantity	Size	Description
1	4	¼-20 x ¾	S.S.S.
2	6	¼-20 x 1	S.H.C.S.
3	2	5/16-18 x 1 ½	S.H.C.S.
4	2	5/16-18	LOCK WASHER
5	2	5/16-18	FLAT WASHER
6	2	¼-20	LOCK WASHER
7	2	¼-20	FLAT WASHER
8	2	M8 – 1.25mm x 40mm	S.H.C.S.
9	1	-	READER HEAD BRACKET
10	1	-	LONG VERTICAL BRACKET
11	1	-	LONG HORIZONTAL BRACKET
12	4	6-32 x 3/8	S.S.S.
-	10	6"	CABLE TIES
-	2	11"	CABLE TIES
-	2	3/8	CABLE CLAMPS
-	2	8-32 X 1 1/8	S.H.C.S. FOR OPTIONAL READER HEADS
-	2	8-32 X ¼	S.H.C.S. FOR CABLE CLAMPS
-	2	5/16-18 X 1 ¼	S.H.C.S.
-	2	10/32 X ¾	B.H.C.S. FOR OPTIONAL READER HEADS
-	2	8-32	NYLOCK NUTS
-	2	8-32	FLAT WASHERS
-	2	8/32 x 1	S.H.C.S.

X-Axis Hardware

Code #	Quantity	Size	Description
1	3	¼-20 x ¾	S.H.C.S.
2	2	M4 x 24	S.H.C.S.
3	2	10-32 x 5/8	S.H.C.S.
4	4	M5 x 12	S.S.
5	1	-	CROSSLIDE READER HEAD
6	1	-	SCALE BACKER BAR
-	5	10-32 x 3/8	B.H.C.S. FOR SCALE COVER
-	1	-	SCALE COVER

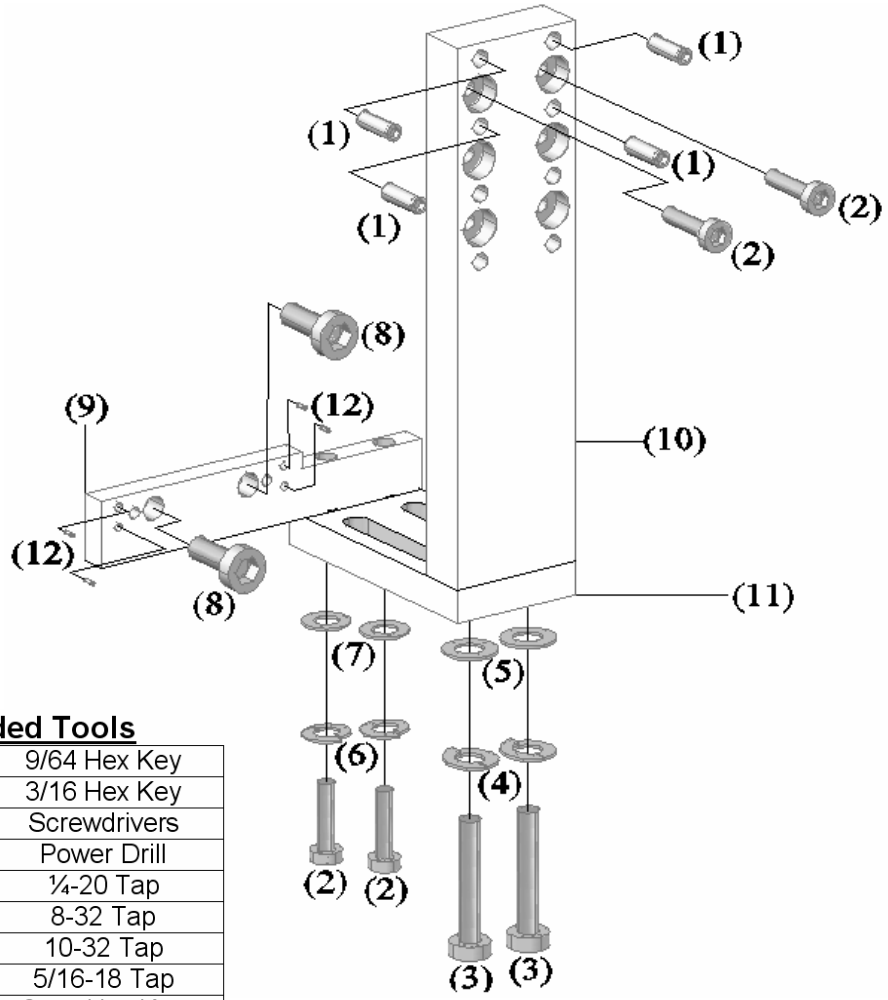

Recommended Tools

7/64 Hex Key	9/64 Hex Key
5/32 Hex Key	3/16 Hex Key
¼ Hex Key	Screwdrivers
Wire Snips	Power Drill
No. 7 Drill	¼-20 Tap
No. 29 Drill	8-32 Tap
No. 21 Drill	10-32 Tap
F Drill	5/16-18 Tap
Indicator with Base	6mm Hex Key
3mm Hex Key	1.5mm Hex Key

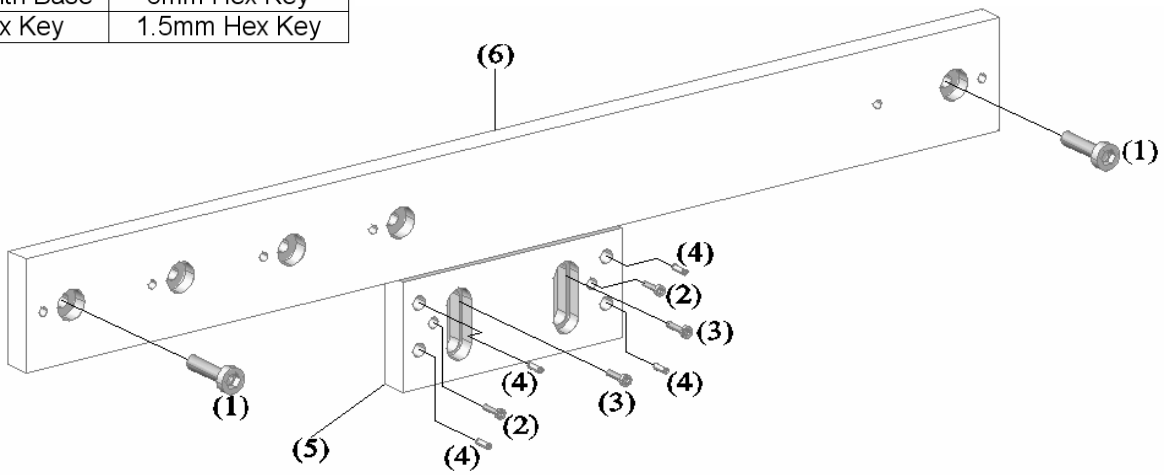

TROUBLESHOOTING: Scale does not count. Verify spacing and alignment.