****(ENGLISH SCREWS ARE SUPPLIED IN THE HARDWARE KIT TO MOUNT THE READER HEAD. THE METRIC SCREWS ARE NOT NECESSARY.)****

SPACING

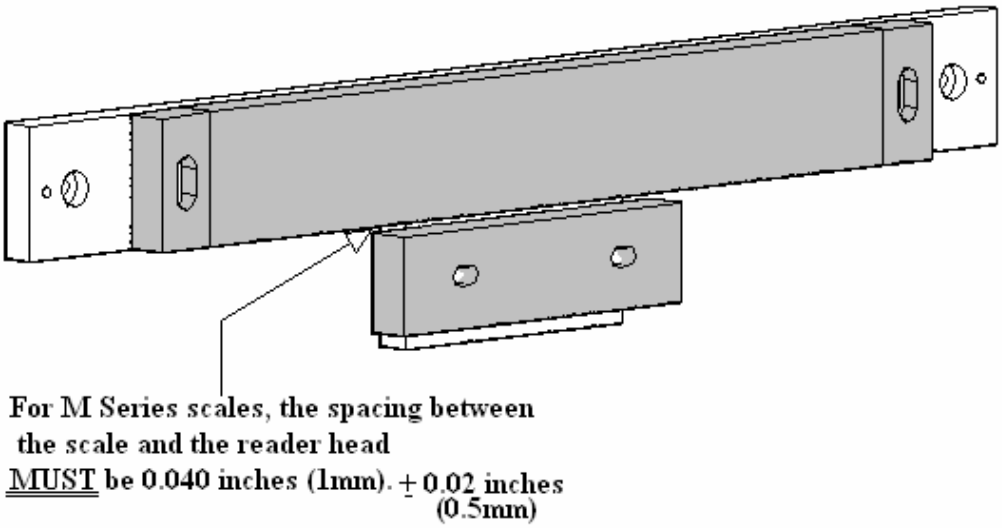

ALIGN THE SIDES OF THE SCALE by indicating the ends and the center.

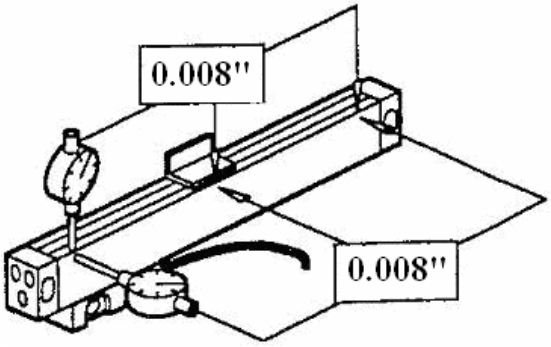

1. Assemble 4-pieces Fixed Bracket, Support Bracket, Connecter Bracket, and Reader Head Bracket using hardware supplied.

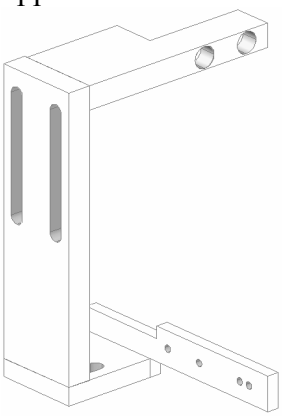

2. Clean right side of knee and saddle. If no holes are provided they will need to be drilled and tapped. Use the Fixed Bracket to locate the holes by pre-assembling brackets and holding them to the side of the machine. Keep in mind the relationship between the scale and the reader head**.**

3. Mount the Scale Base Mounts parallel and square to the saddle travel by using the set screws.

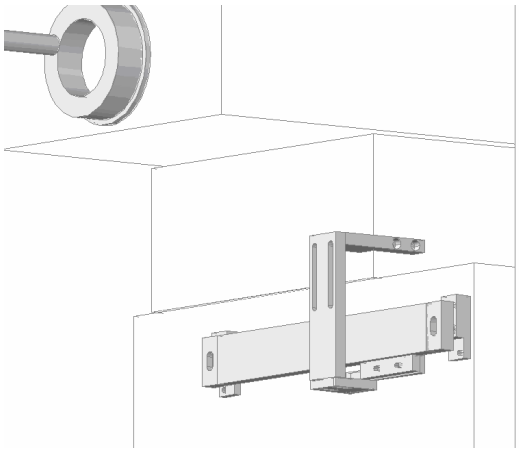

4. Install the scale onto Scale Base Mounts.

5. Set this assembly to the scale reader head per specifications on page 1. Using the slots provided in the brackets for adjustments making sure to tighten all bolts. Remove red spacer from reader head.

6. Carefully move the machine to its full travel in both directions checking that you don't over travel the scale and reader head which will cause damage to the scale and reader head.

7. Tie up cables with cable clamps and cable ties so they travel with the machine, but won't get caught up anywhere.

Hardware #1

Code #	Quantity	Size	Description
1	6	8/32 x 1	S.H.C.S.
2	2	8/32 x ¾	S.H.C.S.
3	2	10/24 x 5/8	F.H.C.S.
4	2	¼-20 x ¾	S.S.
5	2	¼-20 x 3/8	S.S.
6	2	¼-20 x 1	S.H.C.S.
7	4	¼-20 x 1 ¼	S.H.C.S.
8	4	¼	FLAT WASHERS
9	4	¼	LOCK WASHERS
11	2	10/32 x 1	S.H.C.S.
10	2	-	CABLE CLAMPS
12	2	8/32 x 3/8	S.H.C.S. FOR CABLE CLAMPS
13	8	6”	CABLE TIES
14	1	-	FIXED BRACKET
15	1	-	SUPPORT BRACKET
16	1	-	READER HEAD BRACKET
17	1	-	CONNECTER BRACKET
18	1	-	LEFT SCALE BASE MOUNT
19	1	-	RIGHT SCALE BASE MOUNT

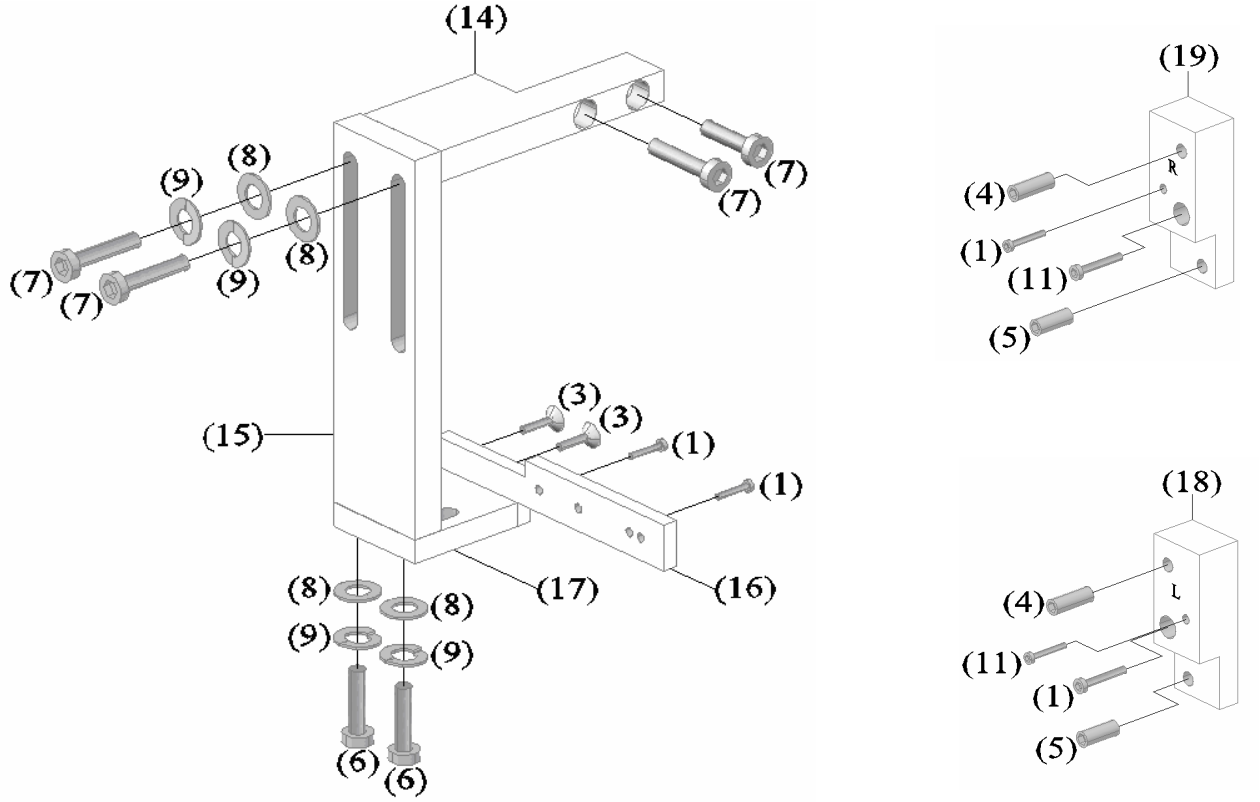

X-Axis Hardware

Code #	Quantity	Size	Description
1	4	8-32 x 1	S.H.C.S.
2	1	¼-20 x 1	S.H.C.S. FOR TABLE STOP
3	1	-	TABLE STOP
-	1	-	LAMINATED SHIM
-	1	0.350 O.D. X 0.130 I.D.	WASHER
-	2	0.310 O.D. X 0.180 I.D.	WASHER
-	1	-	ARBOR SHIM
-	1	8-32 x ¼	S.H.C.S. FOR CABLE CLAMP
-	1	-	CABLE CLAMP
-	5	-	CABLE TIES

1. Clean the back side of the table and saddle.

2. Find centerline of the table travel in relationship to the centerline of the saddle. Use the scale to locate mounting holes for scale and reader head. Drill and tap for 8-32 SHCS.

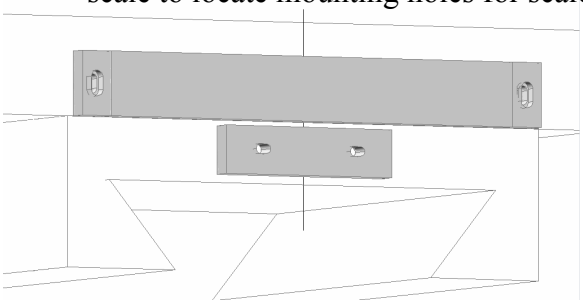

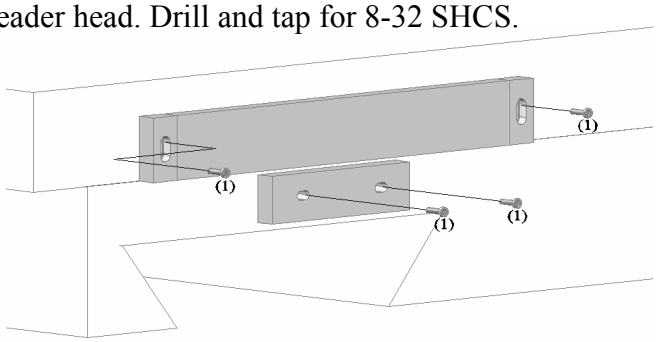

3. Mount the scale per specifications on page 1.

4. Mount the reader head to the saddle per specifications supplied with the scale. Use the laminated shim supplied for any necessary adjustment. Remove red spacer from reader head.

5. Drill and tap ¼-20 hole for the table stop and mount securely.

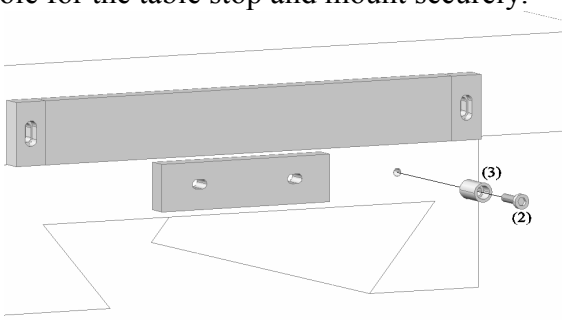

6. Carefully move the machine to its full travel in both directions checking that you don't over travel the scale and reader head which will cause damage to the scale and reader head.

7. Tie up cables with cable clamps and cable ties so they travel with the machine, but won't get caught up anywhere.

1. Mount arm to side of ram, flush or just above the bottom of the ram, far enough back so quill handle doesn't interfere with display arm, with ¼ x 20 S.H.C.S. If arm isn't parallel you can adjust the set screws.

2. Mount Stand Off Bracket with ¼ - 20 Hex Head Bolt, Nylock Nut and Flat Washer. NOTE: C/B for 6 M.M. S.H.C.S. must be down.

3. Mount display to Stand Off Bracket with the M-6 S.H.C.S. supplied with display.

Hardware

Code #	Quantity	Size	Description
1	1	¼-20 x 2 ½	HEX HEAD BOLT
2	1	¼	FLAT WASHER
3	1	¼-20	NYLOCK NUT
4	4	¼-20 x ¾	S.H.C.S.
5	4	¼-20 x ¾	S.S.
6	1	-	STRAIGHT ARM
7	1	-	CHANNEL MOUNT
8	1	-	STAND OFF BRACKET

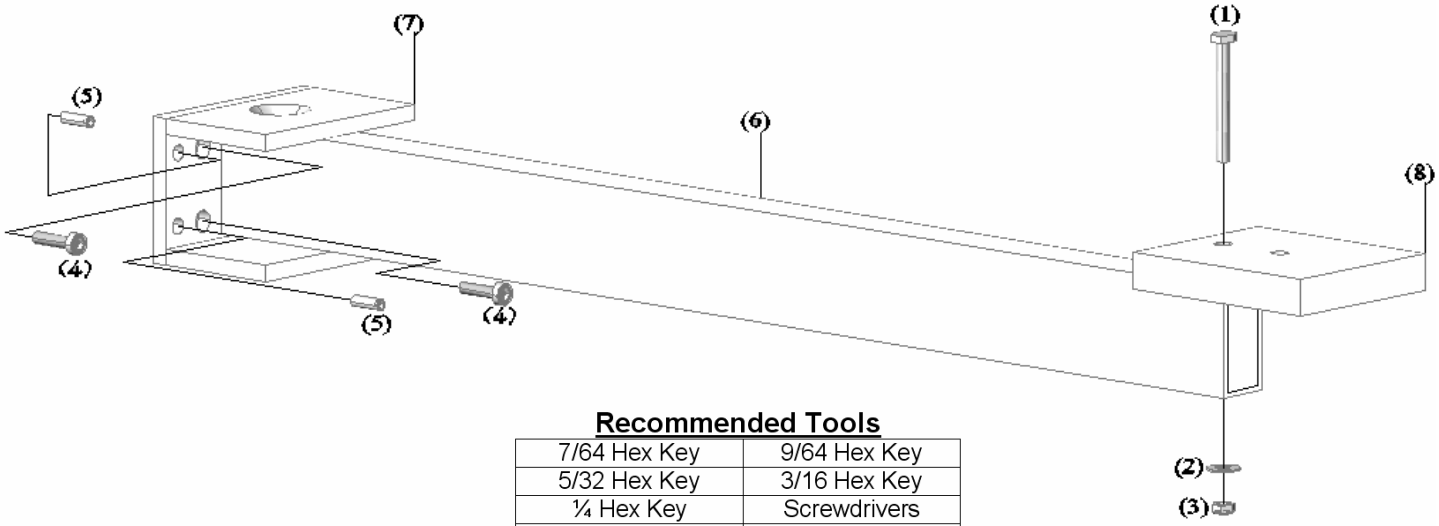

Recommended Tools

7/64 Hex Key	9/64 Hex Key
5/32 Hex Key	3/16 Hex Key
¼ Hex Key	Screwdrivers
Wire Snips	Power Drill
No. 7 Drill	¼-20 Tap
No. 29 Drill	8-32 Tap
No. 21 Drill	10-32 Tap
F Drill	5/16-18 Tap
Indicator with Base	6mm Hex Key
3mm Hex Key	1.5mm Hex Key

TROUBLESHOOTING: Scale does not count. Verify spacing and alignment.