****(ENGLISH SCREWS ARE SUPPLIED IN THE HARDWARE KIT TO MOUNT THE READER HEAD. THE METRIC SCREWS ARE NOT NECCRSSARY.)****

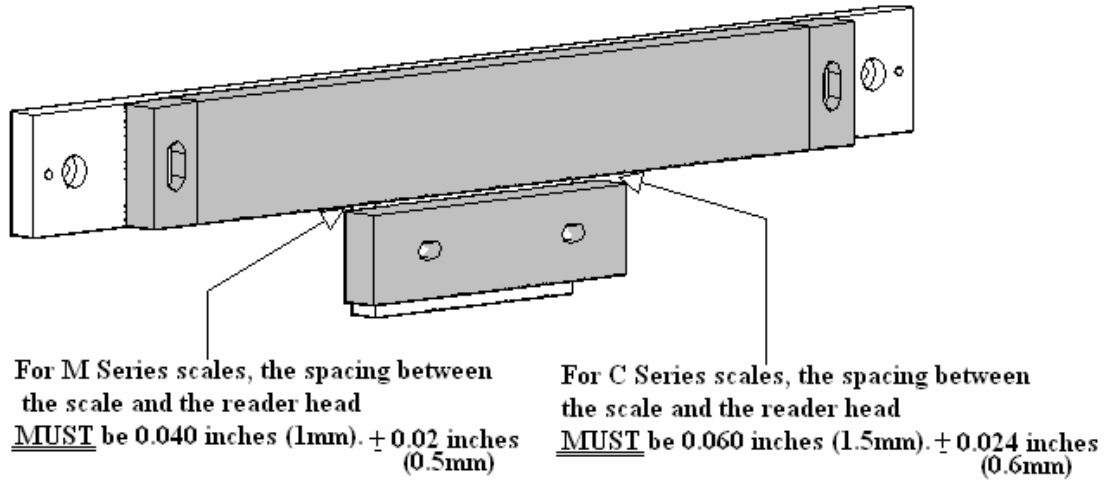

SPACING

ALIGN THE SIDES OF THE SCALE by indicating the ends and the center.

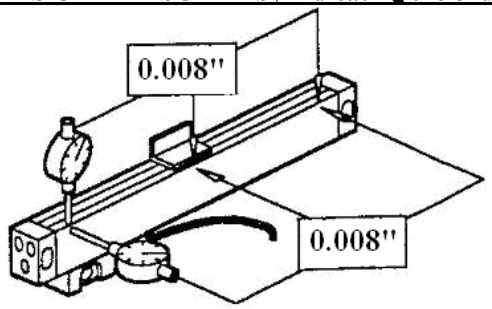

The following instructions are to be used with the instructions supplied with the scales.

1. Clean right side of knee and saddle. If no holes are provided they will need to be drilled and tapped. Use the brackets to locate the holes by pre-assembling brackets and holding them to the side of the machine. Keeping in mind the relationship between the scale and the reader head.

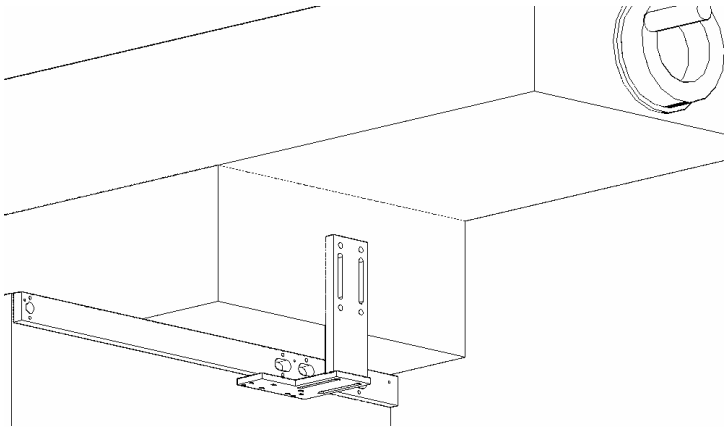

2. Mount the Scale Backer Bar front parallel and square to the saddle travel either by using the 1.0” spacers and arbor shims or by using the set screws. You can use either 3/8-16 SHCS or ¼-20 SHCS with Step Down Collars.

3. Install the scale onto Scale Backer Bar per specifications on page 1.

4. The reader head mounts using a two piece bracket assemble having slots for the vertical and horizontal adjustments. The horizontal piece can be turned to the left or right and the vertical piece can be used in the slots in three different positions. The holes in the horizontal piece can accommodate the C or M type reader heads with the cable coming out to the right or left. Use the M5 screws for the C type and the M4 screws for the M type reader heads. Please make sure the Belleville washers provided are used to secure all the screws in this bracket assembly.

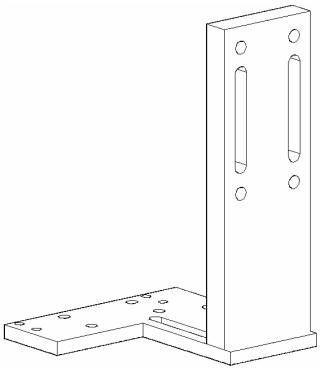

5. Set this assembly to the scale reader head per specifications on page 1. Using the slots provided in the brackets for adjustments making sure to tighten all bolts. Remove red spacer from reader head.

6. Carefully move the machine to its full travel in both directions checking that you don’t over travel the scale and reader head which will cause damage to the scale and reader head.

7. Tie up cables with cable clamps and cable ties so they travel with the machine, but won’t get caught up anywhere.

1. Clean the side of the table and saddle.
2. Find centerline of the table travel in relationship to the centerline of the saddle. Use the scale to locate mounting holes for scale. Drill and tap for 8-32 SHCS.

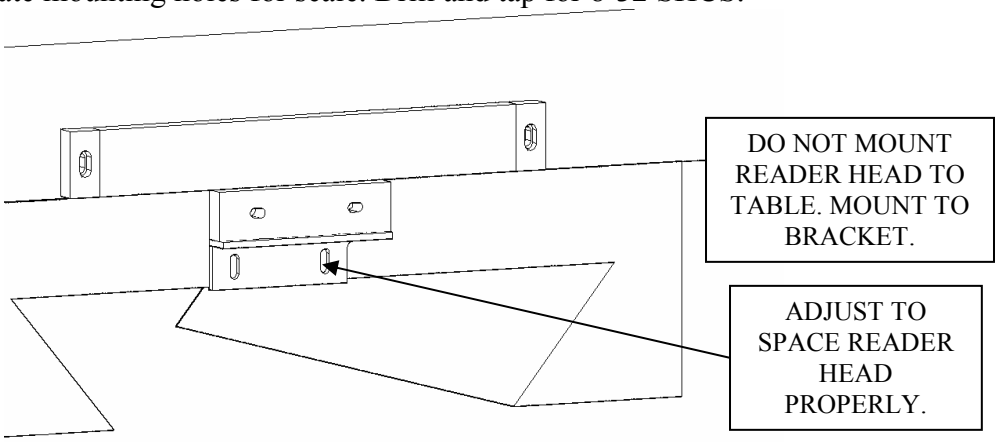

3. Mount the scale per specifications on page 1.
4. Mount the reader head bracket to the saddle using 10-32 BHCS.
5. Mount the reader head to the bracket per specifications on page 1. Use the laminated shim supplied for any necessary adjustment. Remove red spacer from reader head.
6. Drill and tap ¼-20 hole for the table stop and mount securely.

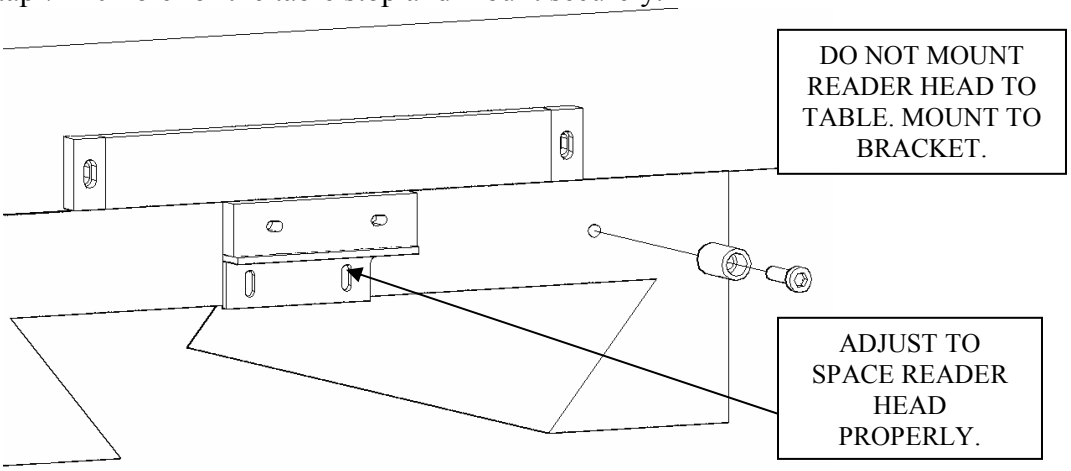

7. Carefully move the machine to its full travel in both directions checking that you don't over travel the scale and reader head which will cause damage to the scale and reader head.
8. Tie up cables with cable clamps and cable ties so they travel with the machine, but won't get caught up anywhere.

Bracket Hardware

Code #	Quantity	Size	Description
1	2	¼-20 x 1	B.H.C.S.
2	2	¼-20 x ¾	B.H.C.S.
3	4	¼-20 x ½	S.S.
4	2	10-32 x ½	B.H.C.S.
5	4	¼-20	FLAT SS WASHERS
6	4	¼-20	BELLEVILLE WASHERS
7	1	-	VERTICAL BRACKET
8	1	-	HORIZONTAL BRACKET
9	1	-	READER HEAD BRACKET
10	2	M5	B.H.C.S.
11	4	M4	B.H.C.S.
12	2	M5	FLAT SS WASHERS
13	4	M4	FLAT SS WASHERS
14	2	M5	BELLEVILLE WASHERS
15	4	M4	BELLEVILLE WASHERS
16	2	10-32	BELLEVILLE WASHERS
17	2	10-32	FLAT SS WASHERS
-	2	8-32 x 1	S.H.C.S.

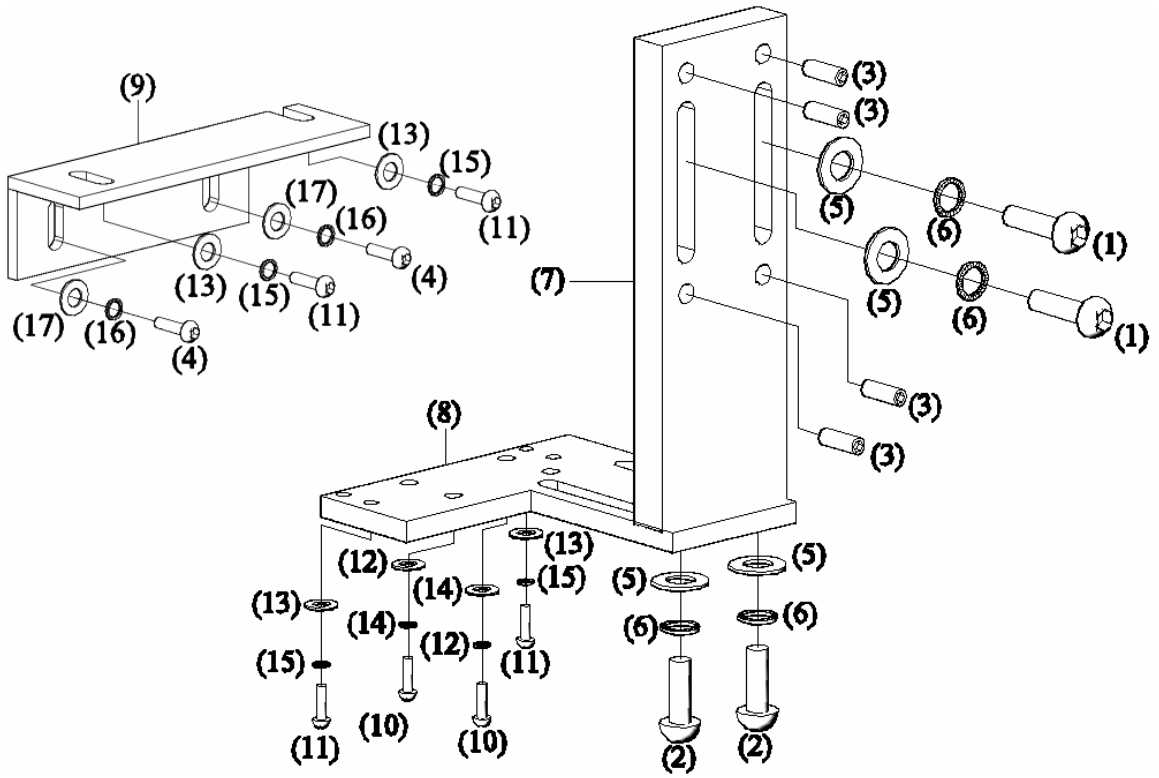

Scale Hardware

Code #	Quantity	Size	Description
1	2	3/8-16 x 1 ½	S.H.C.S.
2	2	¼-20 x 1 ¾	S.H.C.S.
3	1	-	BACKER BAR
4	2	¼-20	STEP DOWN COLLARS
5	4	¼-20 x 1	S.S.
6	2	1”	SPACERS
7	2	8/32 x 1	S.H.C.S.
-	1	-	TABLE STOP
-	10	6”	CABLE TIES
-	2	-	CABLE CLAMPS
-	6	0.010	ARBOR SHIMS
-	2	8/32 x ¼	B.H.C.S.
-	1	¼-20 x 1	S.H.C.S. FOR TABLE STOP
-	2	0.200	SPACERS

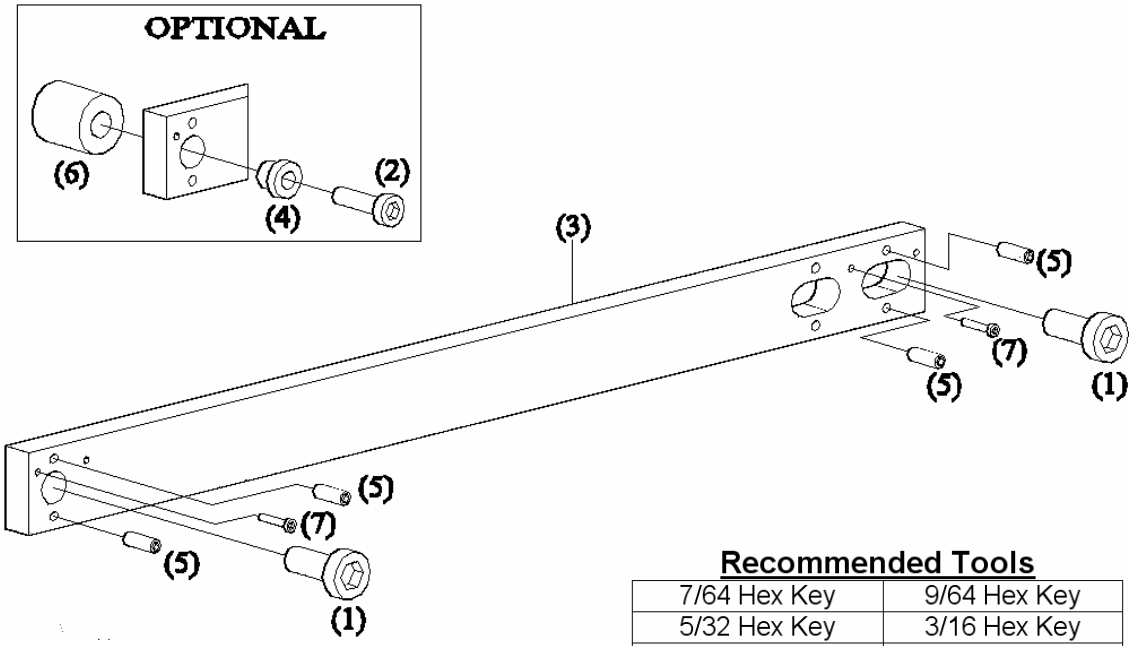

Recommended Tools

7/64 Hex Key	9/64 Hex Key
5/32 Hex Key	3/16 Hex Key
¼ Hex Key	Screwdrivers
Wire Snips	Power Drill
No. 7 Drill	¼-20 Tap
No. 29 Drill	8-32 Tap
No. 21 Drill	10-32 Tap
F Drill	5/16-18 Tap
Indicator with Base	6mm Hex Key
3mm Hex Key	1.5mm Hex Key

TROUBLESHOOTING: Scale does not count. Verify spacing and alignment.